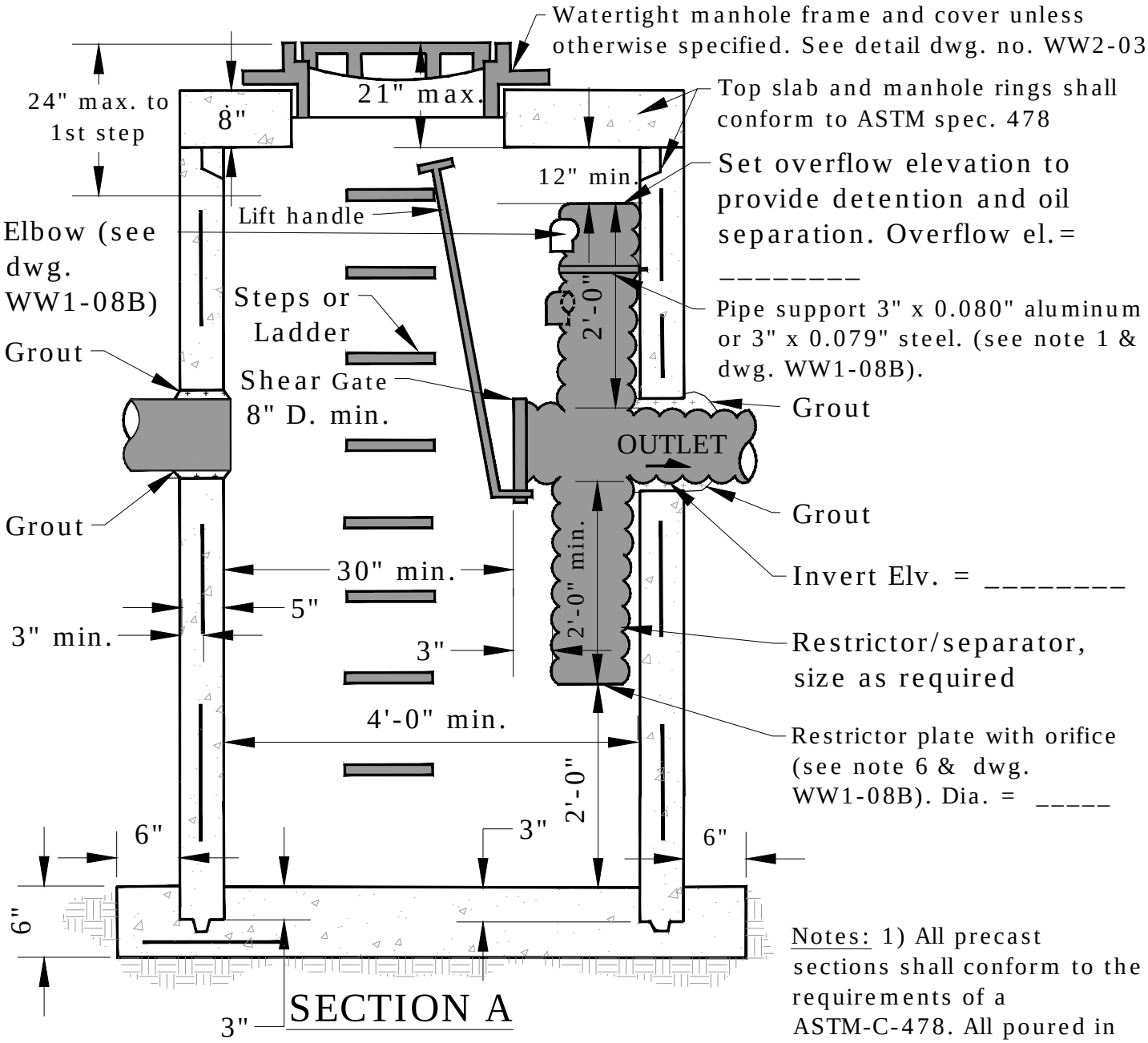

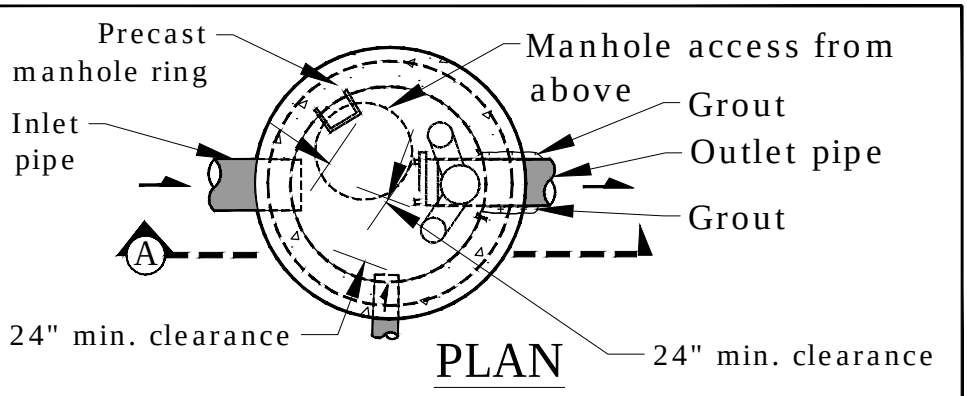

Notes: 1) All precast sections shall conform to the requirements of a ASTM-C-478. All poured in place concrete shall have a 28 day strength of 3,000 p.s.i. & 2" to 4" slump.
2) Elevs. of base, i.e., & overflow shall be approved by City.
3) See City std. detail WW1-08B for elbow, lift handle, shear gate details & notes.

City of Lake Oswego
Engineering Division
Guy Graham, P.E. Public Works Director
City Engineer

POLLUTION/FLOW CONTROL MANHOLE

DRAWING NUMBER: SD1-08A

Drawn: DB	Redrawn:
Design: AH	Redesigned:
Check: AH	Update: KBK
Scale: N.T.S.	Update Check: DK
Date: 5/6/03	Date/Update: 3/20/12